Owner's Manual

DJ Lase

DJ Lase Performance 150 RGY / 250 RVP / 200 GVC

STAIRVILLE

Contents

General notes on safety notes 3
Power supply 3
Operating conditions 3

Laser safety 4
Intended use 4

Installation 5
Safety switch 5
General installation rules 6
DMX connectors 6

Setup 7
Connections in DMX mode 7
Connections in master/slave mode 7

Components and functions 8
Front side 8
Rear side 9

Operation 10
Start the device 10
Main menu 10
Auto show mode 10
Sound sensitivity 11
DMX mode 11
Master/slave mode 11
Self test mode 11
Stop the device 11
Menu diagram 12
Functions in DMX mode (DJ Lase Performance 150 RGY, item no. 255905) 13
Functions in DMX mode (DJ Lase Performance 250 RVP, item no. 255906) 14
Functions in DMX mode (DJ Lase Performance 200 GVC, item no. 255907) 15
Pattern list 16

Troubleshooting 17
The device does not work, no light and the fan does not work 17
No response to the DMX controller 17

Cleaning 17

Technical data 18

Protecting the environment 19
Disposal of the packaging material 19
Disposal of your old device 19

General notes on safety notes

Read all safety warnings and all instructions. Failure to follow the warnings and instructions may result in electric shock, fire or serious injury.
Save all warnings and instructions for future reference.

DANGER

Electric shock caused by high voltages inside!

Within the unit there are areas where high voltages may be present. To reduce the risk of electric shock do not remove any covers unless the AC mains power cord is removed. Covers should be removed by qualified service personnel only.
There are no user-serviceable parts inside.

DANGER

Electric shock caused by short circuit!

Always use proper ready-made insulated mains cabling (power cord) with a protective contact plug. Do not modify the mains cable or the plug. Failure to do so could result in electric shock/death or fire. If in doubt, seek advice from a registered electrician.

Power supply

Notice

Malfunction or damage to equipment!

Ensure that the input voltage (AC outlet) matches the voltage rating of the product. Failure to do so could result in damage to the product and possibly the user.
Unplug the unit before electrical storms occur and when unused for long periods of time.

Operating conditions

Always install and use the device in accordance with these instructions.

Notice

Malfunction or damage to equipment!

This device has been designed for indoor use only. Do not expose the device to any liquid or moisture. Do not install the unit near any direct heat source. Keep the unit away from naked flames.
Do not block areas of ventilation. Failure to do so could result in fire.
This device has not been designed for continuous use. Regular breaks during operation are essential to maximize the lifetime.
Do not switch the device on and off in short time intervals.

Laser safety

This information is based on DIN EN 60825-1.
This device is a class 3B laser product. It is equipped with a safety key. Always remove the key when the device is not operated by trained personnel.
As an operator you are responsible for the safety of all persons present.
Familiarize yourself with the laser safety regulations that apply in your country. To ensure safe operation, it is important to pay attention to the following instructions.

DANGER

Laser radiation – avoid exposure to beam!

This device is a class-3B laser product, classified according to EN 60825-1. Do not look into the laser beam. The laser beam can injure your eyes when you directly look into it.
Do not expose to the laser beam. The laser beam can cause skin burns.
In this context take extreme care when using converging optical instruments.

WARNING

Risk of epileptic shock!

Strobe lighting can trigger seizures in photosensitive epilepsy. Sensitive persons must avoid looking at strobe lights.

Notice

Laser radiation – fire hazard!

Keep the laser area free of flammable objects.

Intended use

This device has been designed for show applications only. Any compensation claims caused by inappropriate or unintended use are always excluded.

Installation

DANGER

Laser radiation!

During installation follow the instructions specified in section “Laser safety” on page 4.

DANGER

When using additional components!

Additional components can cause dangerous laser beam diffusion when they are not properly connected.

Notice

Safety switch required!

We strongly recommend to install a remote manual safety switch to the device. The safety switch turns the laser off immediately.

Safety switch

We strongly recommend to connect a remote safety switch as shown in the following figure to connector (7) of the device. An adapter for safety switches equipped with phone jacks is included in the delivery
If you press the switch, the laser beam will be turned off immediately. To release the switch and to start the operation again, turn the knob clockwise.

General installation rules

You can install the device on the wall, the ceiling or on the ground. A mounting bracket is provided together with the device.

WARNING

Injuries caused by falling parts!

Make sure that the installation complies with the standards and rules that apply in your country.
Always secure the device with a secondary safety attachment, such as a safety cable or a safety chain.

Notice

Malfunction or damage to equipment!

The distance between light output and the illuminated surface must be more than 0.5 m (19.7 in).
Ensure also that there is enough room for ventilation.
The ambient temperature must always be between 10 °C (50 °F) and 40 °C (104 °F).

DMX connectors

A female 3-pin XLR connector is used for the DMX output, a male 3-pin XLR connector for the DMX input. The figure below and the following table show the pin assignment.

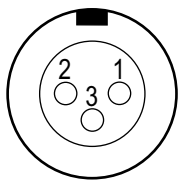

1	Ground
2	DMX data (–)
3	DMX data (+)

Setup

DANGER

Laser radiation!

During setup follow the instructions specified in section “Laser safety” on page 4.

The required connections depend on the operation mode of the device.

Notice

Malfunction or damage to equipment!

For failure-free operation of the DMX chain, use dedicated DMX cables. Never use ordinary microphone cables.
Never connect the DMX output to audio devices such as mixers or amplifiers. The voltages used on the DMX lines may severely damage the audio input circuits.

Connections in DMX mode

Connect the DMX input of the device to the DMX output socket of a DMX controller or another DMX device. Connect the output of the first DMX device to the input of the second one, and so on to form a daisy chain. Always ensure that the output of the last DMX device in the daisy chain is terminated with a 120-Ω resistor. When the device is configured for DMX mode, but no DMX signal is being received, the display flashes.

Connections in master/slave mode

When you configure a group of devices in master/slave mode, the first unit will control the other units for an automatic, sound-activated, synchronized light show. This function is ideal when you want to start a show immediately. Connect the DMX output of the master device to the DMX input of the first slave device. Then connect the DMX output of the first slave device to the DMX input of the second slave device and so on.

Components and functions

Front side

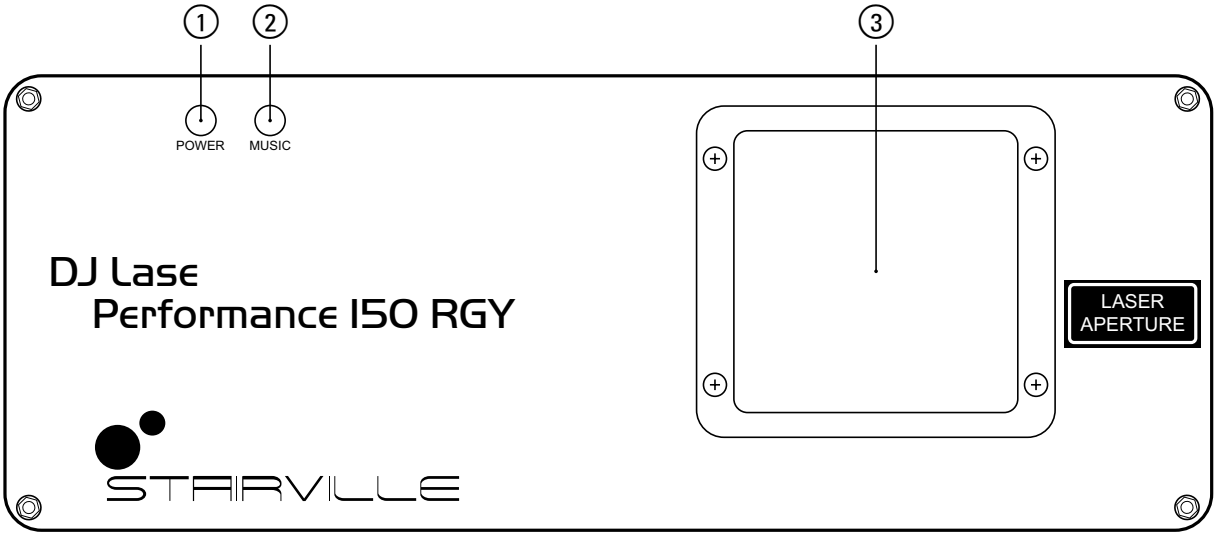

1	POWER: Shows that the device is turned on
2	MUSIC: Shows that a sound or music signal is being detected
3	Laser aperture

Rear side

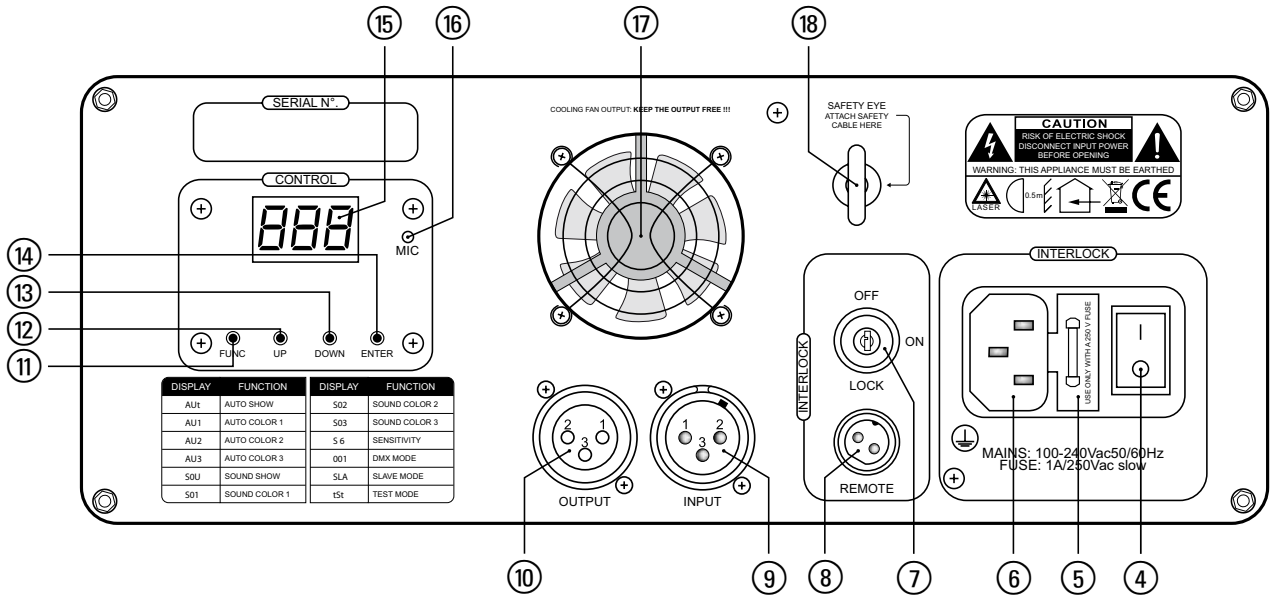

DISPLAY	FUNCTION	DISPLAY	FUNCTION
AUt	AUTO SHOW	S02	SOUND COLOR 2
AU1	AUTO COLOR 1	S03	SOUND COLOR 3
AU2	AUTO COLOR 2	S 6	SENSITIVITY
AU3	AUTO COLOR 3	001	DMX MODE
S0U	SOUND SHOW	SLA	SLAVE MODE
S01	SOUND COLOR 1	tSt	TEST MODE

④	Main switch
⑤	Fuse holder
⑥	Plug for mains cable; the input voltage is printed next to it
⑦	LOCK: Safety key switch: Turns the laser output on or off
⑧	REMOTE: Connector for optional remote safety switch. An adapter for safety switches equipped with phone jacks is included in the delivery.
⑨	INPUT: DMX input
⑩	OUTPUT: DMX output
⑪	FUNC: Opens the main menu
⑫	UP: Increases the displayed value by one
⑬	DOWN: Decreases the displayed value by one
⑭	ENTER: Chooses between the options of the selected mode
⑮	Display
⑯	
⑰	Fan
⑱	Safety eye

Operation

Start the device

Perform the following steps to start the operation:

1. Verify that all required laser safety precautions have been taken. Make sure that there is no one in the reach of the laser beam.
2. Insert the safety key (7) and turn it to the “OFF” position.
3. If not already connected, connect the device to the mains (6).
4. Using the main switch (4), turn the device on. After a few seconds, the fan and the motors start to work. The display shows the current operation mode. The device is now operational.
5. Turn the safety key (7) to the “ON” position to turn the laser beam on.

Main menu

Press “FUNC” to activate the main menu and to select one of the operation modes.
When the display flashes, use the “UP” and “DOWN” buttons to change the displayed value. When the display shows the desired value, press “ENTER”. To go back to the main menu without any changes, press “FUNC” or wait for one minute.
All settings that were made previously are kept, even if you disconnect the device from the power supply.

Auto show mode

Aut Press “FUNC” until the display shows “Aut”. The device operates in stand-alone mode and displays a pre-programmed show that can optionally be controlled by the built-in microphone. Using the “UP” and “DOWN” buttons, you can now choose between the show types shown in the table below. Press “ENTER” to confirm and to start the operation.

Display	Function		
	DJ Lase Performance 150 RGY	**DJ Lase Performance 250 RVP**	**DJ Lase Performance 200 GVC**
	Item no. 255905	**Item no. 255906**	**Item no. 255907**
Aut	Auto show, green+red+yellow	Auto show, violet+red+pink	Auto show, green+violet+cyan
Au 1	Auto show, red	Auto show, violet	Auto show, green
Au2	Auto show, green	Auto show, red	Auto show, violet
Au3	Auto show, yellow	Auto show, pink	Auto show, cyan
Sou	Sound-controlled show, green+red+yellow	Sound-controlled show, violet+red+pink	Sound-controlled show, green+violet+cyan
So 1	Sound-controlled show, red	Sound-controlled show, violet	Sound-controlled show, green
So2	Sound-controlled show, green	Sound-controlled show, red	Sound-controlled show, violet
So3	Sound-controlled show, yellow	Sound-controlled show, pink	Sound-controlled show, cyan

Sound sensitivity

S 6 Press “FUNC” until the display shows “S 6” and starts flashing. This menu is used to set the sensitivity of the microphone. Using the “UP” and “DOWN” buttons, you can now choose between “S 0” (sensitivity = 0, music mode disabled) and “S 1” (low sensitivity) to “S 9” (high sensitivity). Press “ENTER” to store the setting.

DMX mode

001 Press “FUNC” until the display shows “001”. You can now set the number of the first DMX channel of the device (DMX address). Select a value between 1 and 512 using the “Up” and “Down” buttons. Press “ENTER” to store the value and to start the operation in DMX mode.
Ensure that this channel number fits to the configuration of your DMX controller. Since the device uses nine DMX channels, the highest usable DMX start address is 504.

Master/slave mode

SLA Press “FUNC” until the display shows “SLA”. In this mode, the device exactly follows the operation of the “master” it is connected to. Press “ENTER” to confirm and to start the operation.

Self test mode

tSt Press “FUNC” until the display shows “tSt”. In this mode, the device performs a short self test. Press “ENTER” to start a continuos test. To finish the continuos self test press “FUNC”.

Stop the device

Perform the following steps to stop the operation:
1. Turn the safety key (7) to the “OFF” position to turn the laser beam off and remove the key. Keep the safety key under control.
2. Using the main switch (4) turn the device off.
3. Optionally, disconnect the device from the mains (6).

Menu diagram

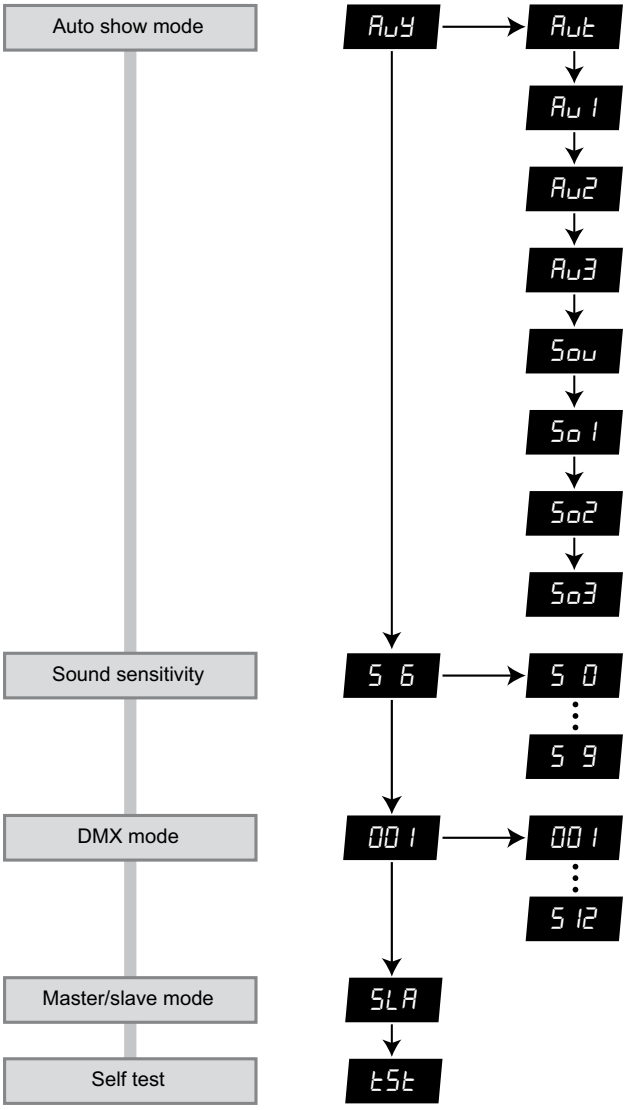

Functions in DMX mode (DJ Laser Performance 150 RGY, item no. 255905)

Channel	Value	Function
1	Mode selection	
	0…27	Laser off
	28…55	Auto show, green+red+yellow
	56…83	Auto show, red
	84…111	Auto show, green
	112…139	Auto show, yellow
	140…167	Sound-controlled show, green+red+yellow
	168…195	Sound-controlled show, red
	196…223	Sound-controlled show, green
	224…251	Sound-controlled show, yellow
	252…255	DMX mode; this setting enables the function of the other DMX channels
2	0…255	Pattern selection (as shown in the pattern list)
3	Zoom	
	0…127	Fixed zoom (100 % to 5 %)
	128…169	Zoom-in effect, speed increasing
	170…209	Zoom-out effect, speed increasing
	210…255	Zoom-in and zoom-out effect, speed increasing
4	X axis moving	
	0…127	128 different fixed positions on X axis
	128…191	Clockwise moving effect, speed increasing
	192…255	Anti-clockwise moving effect, speed increasing
5	Y axis moving	
	0…127	128 different fixed positions on Y axis
	128…191	Clockwise moving effect, speed increasing
	192…255	Anti-clockwise moving effect, speed increasing
6	Y axis rotation	
	0…127	0° to 359° fixed Y axis position
	128…191	Clockwise rolling effect, speed increasing
	192…255	Anti-clockwise rolling effect, speed increasing
7	X axis rotation	
	0…127	0° to 359° fixed X axis position
	128…191	Clockwise rolling effect, speed increasing
	192…255	Anti-clockwise rolling effect, speed increasing
8	Z axis rotation	
	0…127	0° to 359° fixed Z axis position
	128…191	Clockwise rolling effect, speed increasing
	192…255	Anti-clockwise rolling effect, speed increasing
9	Colour selection	
	0…31	Original pre-programmed colour
	32…63	Red
	64…95	Green
	96…127	Yellow
	225…255	Colour rolling

Functions in DMX mode (DJ Lase Performance 250 RVP, item no. 255906)

Channel	Value	Function
1	Mode selection	
	0…27	Laser off
	28…55	Auto show, violet+red+pink
	56…83	Auto show, violet
	84…111	Auto show, red
	112…139	Auto show, pink
	140…167	Sound-controlled show, violet+red+pink
	168…195	Sound-controlled show, violet
	196…223	Sound-controlled show, red
	224…251	Sound-controlled show, pink
	252…255	DMX mode; this setting enables the function of the other DMX channels
2	0…255	Pattern selection (as shown in the pattern list)
3	Zoom	
	0…127	Fixed zoom (100 % to 5 %)
	128…169	Zoom-in effect, speed increasing
	170…209	Zoom-out effect, speed increasing
	210…255	Zoom-in and zoom-out effect, speed increasing
4	X axis moving	
	0…127	128 different fixed positions on X axis
	128…191	Clockwise moving effect, speed increasing
	192…255	Anti-clockwise moving effect, speed increasing
5	Y axis moving	
	0…127	128 different fixed positions on Y axis
	128…191	Clockwise moving effect, speed increasing
	192…255	Anti-clockwise moving effect, speed increasing
6	Y axis rotation	
	0…127	0° to 359° fixed Y axis position
	128…191	Clockwise rolling effect, speed increasing
	192…255	Anti-clockwise rolling effect, speed increasing
7	X axis rotation	
	0…127	0° to 359° fixed X axis position
	128…191	Clockwise rolling effect, speed increasing
	192…255	Anti-clockwise rolling effect, speed increasing
8	Z axis rotation	
	0…127	0° to 359° fixed Z axis position
	128…191	Clockwise rolling effect, speed increasing
	192…255	Anti-clockwise rolling effect, speed increasing
9	Colour selection	
	0…31	Original pre-programmed colour
	32…63	Red
	64…95	Violet
	96…127	Pink
	225…255	Colour rolling

Functions in DMX mode (DJ Lase Performance 200 GVC, item no. 255907)

Channel	Value	Function
1	Mode selection	
	0…27	Laser off
	28…55	Auto show, green+violet+cyan
	56…83	Auto show, green
	84…111	Auto show, violet
	112…139	Auto show, cyan
	140…167	Sound-controlled show, green+violet+cyan
	168…195	Sound-controlled show, green
	196…223	Sound-controlled show, violet
	224…251	Sound-controlled show, cyan
	252…255	DMX mode; this setting enables the function of the other DMX channels
2	0…255	Pattern selection (as shown in the pattern list)
3	Zoom	
	0…127	Fixed zoom (100 % to 5 %)
	128…169	Zoom-in effect, speed increasing
	170…209	Zoom-out effect, speed increasing
	210…255	Zoom-in and zoom-out effect, speed increasing
4	X axis moving	
	0…127	128 different fixed positions on X axis
	128…191	Clockwise moving effect, speed increasing
	192…255	Anti-clockwise moving effect, speed increasing
5	Y axis moving	
	0…127	128 different fixed positions on Y axis
	128…191	Clockwise moving effect, speed increasing
	192…255	Anti-clockwise moving effect, speed increasing
6	Y axis rotation	
	0…127	0° to 359° fixed Y axis position
	128…191	Clockwise rolling effect, speed increasing
	192…255	Anti-clockwise rolling effect, speed increasing
7	X axis rotation	
	0…127	0° to 359° fixed X axis position
	128…191	Clockwise rolling effect, speed increasing
	192…255	Anti-clockwise rolling effect, speed increasing
8	Z axis rotation	
	0…127	0° to 359° fixed Z axis position
	128…191	Clockwise rolling effect, speed increasing
	192…255	Anti-clockwise rolling effect, speed increasing
9	Colour selection	
	0…31	Original pre-programmed colour
	32…63	Violet
	64…95	Green
	96…127	Cyan
	225…255	Colour rolling

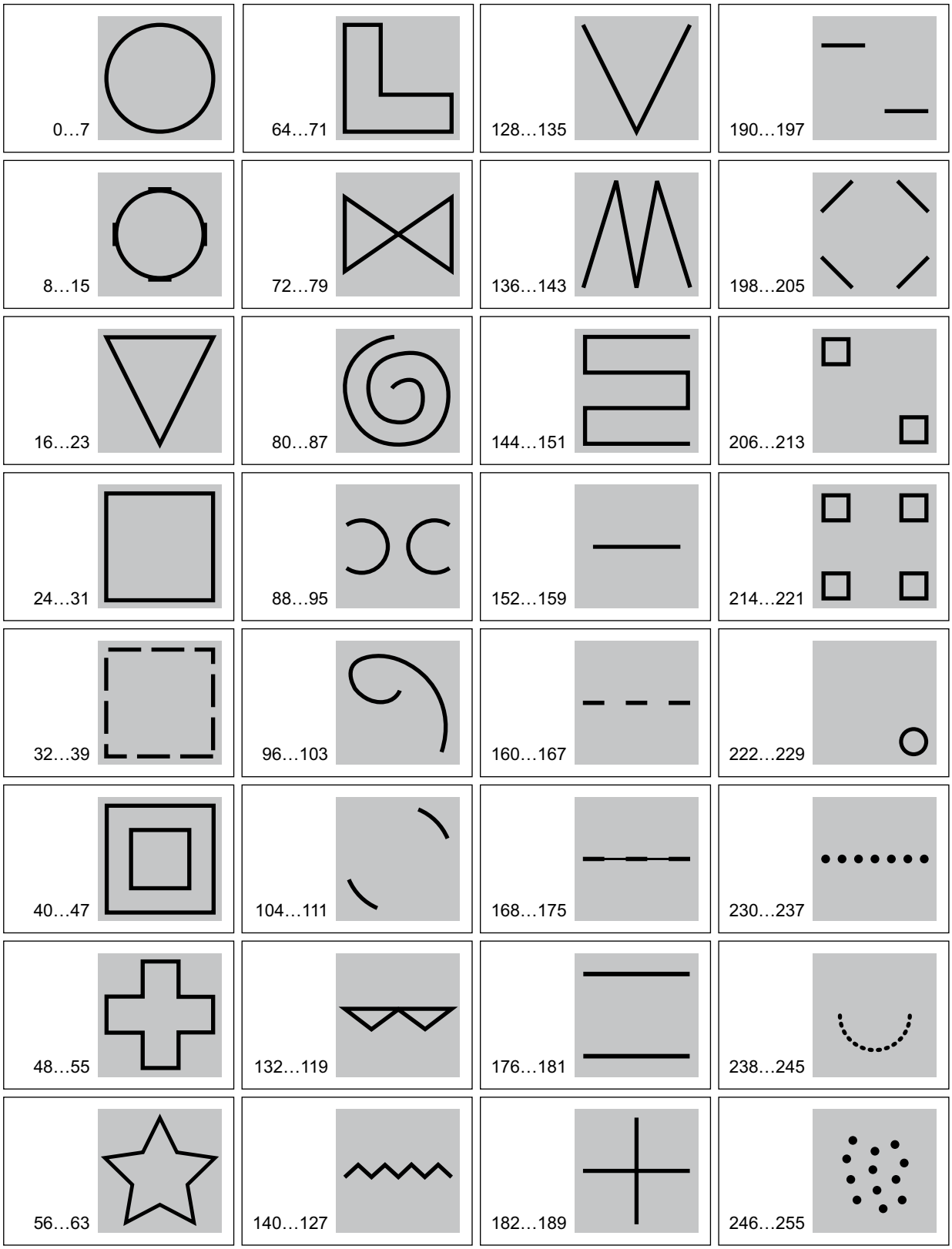
0…7
64…71
128…135
190…197
8…15
72…79
136…143
198…205
16…23
80…87
144…151
206…213
24…31
88…95
152…159
214…221
32…39
96…103
160…167
222…229
40…47
104…111
168…175
230…237
48…55
132…119
176…181
238…245
56…63
140…127
182…189
246…255

Troubleshooting

DANGER

Laser radiation!

During troubleshooting follow the instructions specified in section “Laser safety” on page 4.

DANGER

Laser radiation inside!

Only qualified personnel may carry out service activities when the covers of the device are open.

DANGER

Laser radiation!

Suitable laser protection glasses are required for any activities at the device.

A few common problems that may occur during operation are shown in the following. Here are some suggestions for easy troubleshooting:

The device does not work, no light and the fan does not work

1. Check the power connection and main fuse.

No response to the DMX controller

1. If the display shows a flashing number, for example “001“, no DMX signal is being received. Check the DMX connectors and cables to see if they are properly linked.
2. If the display does not flash and there is no response, check the address settings and DMX polarity.
3. Try to use another DMX controller.
4. Check if the DMX cables run near or alongside high-voltage cables that may cause damage or interference to the DMX interface circuit.

If the procedures recommended above do not succeed, please contact our Service Center. You can find the contact information at www.thomann.de.

Cleaning

DANGER

Laser radiation!

During cleaning follow the instructions specified in section “Laser safety” on page 4.

DANGER

Laser radiation!

To avoid unintended laser emission, remove the safety key before you start to clean the device.

Clean the optical lenses which are accessible from the outside periodically to optimise light output. The cleaning frequency depends on the environment in which the device operates: damp, smoky or particularly dirty surrounding can cause greater accumulation of dirt on the unit’s optics.

- Clean with soft cloth using normal glass cleaning fluid.
- Always dry the parts carefully.
- Clean the external optics at least every 20 days.

Technical data

The laser emission values shown in the following table were measured according to the IEC measurement conditions for the classification.

	DJ Lase Performance 150 RGY	DJ Lase Performance 250 RVP	DJ Lase Performance 200 GVC
Item no.	255905	255906	255907
Laser medium	Green: 532 nm, Nd: YVO4 DPSS	Violet: 405 nm, GaAlAs	Violet: 405 nm, GaAlAs
	Red: 650 nm, LD GaAlAs	Red: 650 nm, LD GaAlAs	Green: 532 nm, Nd: YVO4 DPSS
Laser power	Green: > 50 mW	Violet: > 150 mW	Violet: > 150 mW
	Red: > 100 mW	Red: > 100 mW	Green: > 50 mW
Laser classification acc. to EN 60825-1 2007	3B		
Beam diameter at aperture	< 5 mm		
Pulse data	All pulses < 4 Hz (> 0.25 s)		
Divergence (each beam)	< 2 mrad		
Divergence (total light)	< 160°		
Number of DMX channels	9		
Input voltage	100 VAC … 240 VAC, 50/60 Hz		
Power consumption	15 W		
Fuse	5 mm × 20 mm, 1 A, 250 V, slow characteristic		
Dimensions (W × D × H)	266.0 mm × 185.0 mm × 99.5 mm (10.5 in. × 7.3 in. × 3.9 in.)		
Weight	2.6 kg (5.7 lbs)		

Protecting the environment

Disposal of the packaging material

For the transport and protective packaging, environmentally friendly materials have been chosen that can be supplied to normal recycling.
Ensure that plastic bags, packaging, etc. are properly disposed and are not in the reach of babies and young children. Choking hazard! Do not just dispose these materials with your normal household waste, but make sure that they are fed to a recovery. Please follow the notes and markings on the packaging.

Disposal of your old device

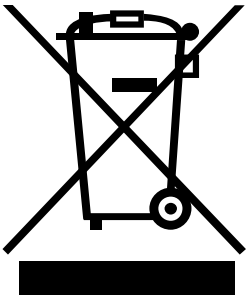

Electrical and electronic equipment often contain materials which can be unhealthy and environmentally harmful, if not properly treated and disposed of. However, they are essential for the proper operation of your device. At the end of its operating lifetime, do not dispose the device with your normal household waste.
This device is subject to the European directive 2002/96/EC.
Dispose this device through an approved waste disposal firm or through your local waste facility. When discarding the unit, comply with the rules and regulations that apply in your country. If in doubt, consult your local waste disposal facility.

© 2011 • Musikhaus Thomann e. K. • Treppendorf 30 • 96138 Burgebrach • Germany • www.thomann.de