stageClix Pack

Reference guide

English

Version 1.0 04/2010

Safety

Do not open; no user serviceable parts inside.
Guarantee invalid if opened.
Unit is not waterproof.
Keep away from water and other liquids.
Maximum operating temperature of this unit is 55^{0}C.
Keep away from electric heaters and flames.
Use a damp cloth for cleaning.
Do not use cleaning agents or solvents.

Legal

stageClix is a trade mark of QDES works BV. QDES Works BV shall in no case be liable for damages arising from use of this product.

A word of gratitude

Thank you for using stageClix! This unit has been designed with the professional musician in mind.
All units use only the best quality components and are produced using RoHS compliant materials - this means they do not contain any harmful substances like lead or mercury. All materials used, including the batteries, can and should be recycled!

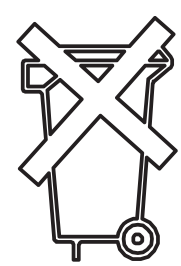

Contents

	Safety & Legal	*ii*
	Contents (this page)	*iii*
1.	What's in the package?	*1*
2.	Getting ready for use	*2*
3.	In use	*3*
4.	Digital or Wired sound	*4*
5.	Radio Frequency Hints	*5*
6.	Channels	*7*
7.	Batteries	*8*
8.	Receiver	*10*
9.	Transmitter	*11*
10.	Accessories	*12*
11.	Other stageClix products	*13*
12.	Conformities	*14*

1. What's in the package?

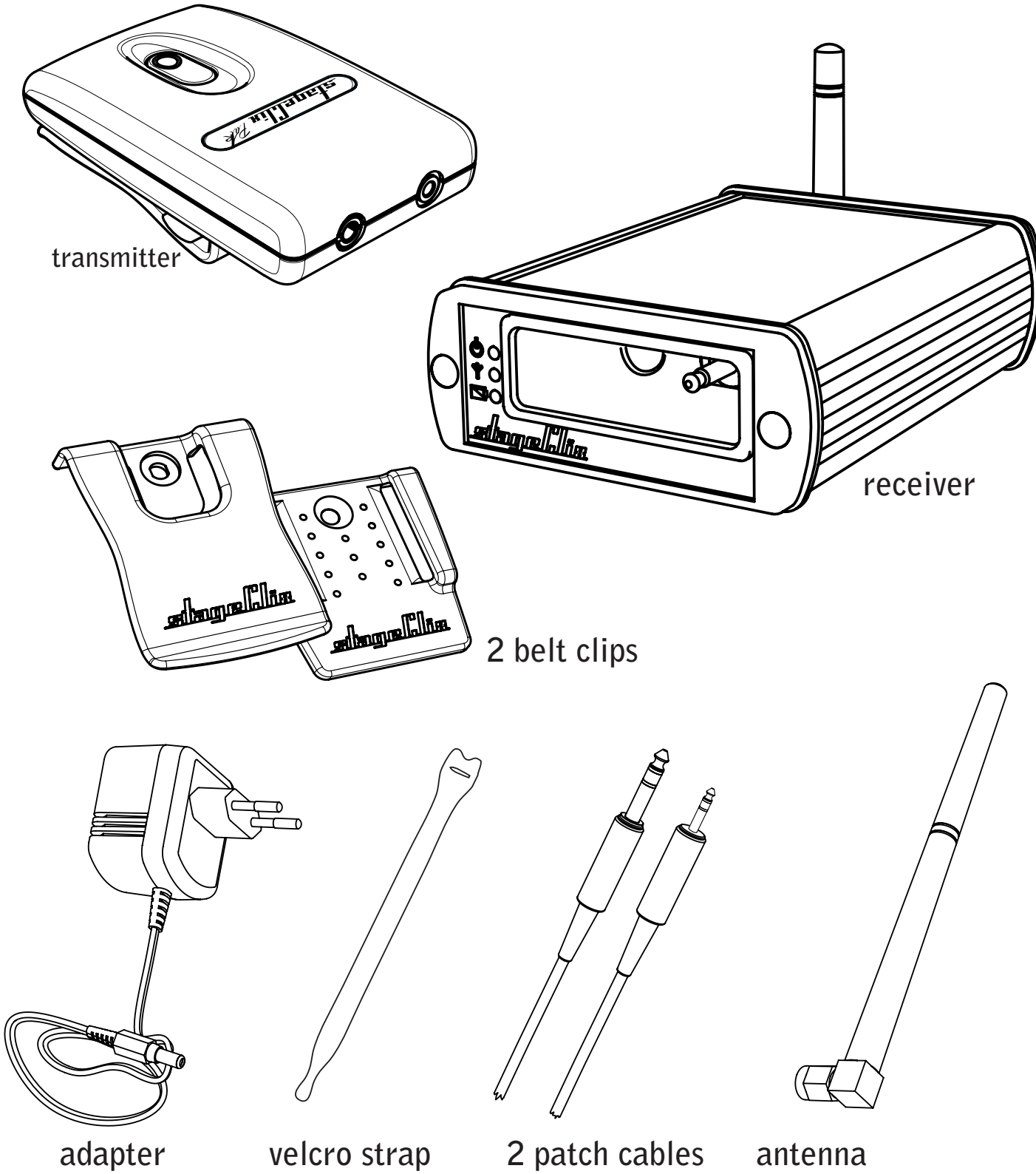

2. Getting ready for use

1. Attach the antenna to the back of the receiver by turning clockwise (do not use tools, do not over tighten)

2. Plug the supplied adapter into a 110-230V supply, and the DC plug into the rear panel DC socket. Only use the stageClix power supply.

3. Use the supplied patch cable to connect the rear panel output jack to your amplifier or to your amplifier, the input of your effects unit, mixer or stagebox.

4. Plug the transmitter into the front socket marked 'charge' and leave the transmitter to charge for some time, preferably more than one hour.

DONE!

3. In use

The transmitter will be automatically switched off when you pull the transmitter out of the receiver. The transmitter is activated by pressing the single button.

3.5mm (high impedance)

This input is designed for line level signals (eg. keyboards, active guitars and basses)

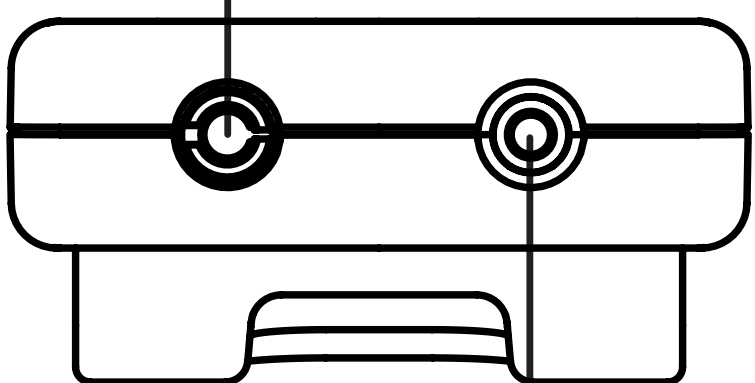

2.5mm input (Pre-amplified)

Input with a built-in preamp for microphones (clip-on's and pick-ups for acoustic instruments)

4. Digital or Wired sound

This unit offers the advantage of two sound options, thanks to some clever circuitry in the transmitter. The default setting is a pure, full bandwith digital sound, or there is the option of using a 'wired' sound. To select (or switch between) sounds, proceed as follows:

--note that the transmitter must not be inserted into the receiver.--

Make sure the transmitter is switched on (white LED glows). Now press the button on the transmitter for at least five consecutive seconds (the white LED will stop glowing while doing this).
You have switched between sounds when the LED on the transmitter starts to blink rapidly. This setting will be stored.

If the batteries are completely drained, your sound setting will be reset to the default setting. To recover your setting after the batteries are charged again, follow the same procedure. Your sound setting can be switched at any time by following this procedure.

5. Radio Frequency Hints

- If possible, install the receiver in a slightly elevated position.
- Keep away from broadband interference sources like WiFi accesspoints or WiFi-enabled laptops, and switching power supplies.
- For maximum range keep the antenna away from other cables and pointing upwards if possible.
- Stone walls and reinforced ferro-concrete walls may partially block the signal.
- This system uses a patented digital transmission technique and triple frequency diversity for a reliable noise-free link.
- This set contains a transmitter legal to be sold in the EU. Some countries may restrict use.
- Refer to www.ero.dk for conformity information.

- Try to keep the transmitter as far as way as possible from active electronics. Attach the transmitter therefore to your belt or guitar strap, or use the velcro strap to attach it elsewhere, to keep it away from interference caused by active electronics.

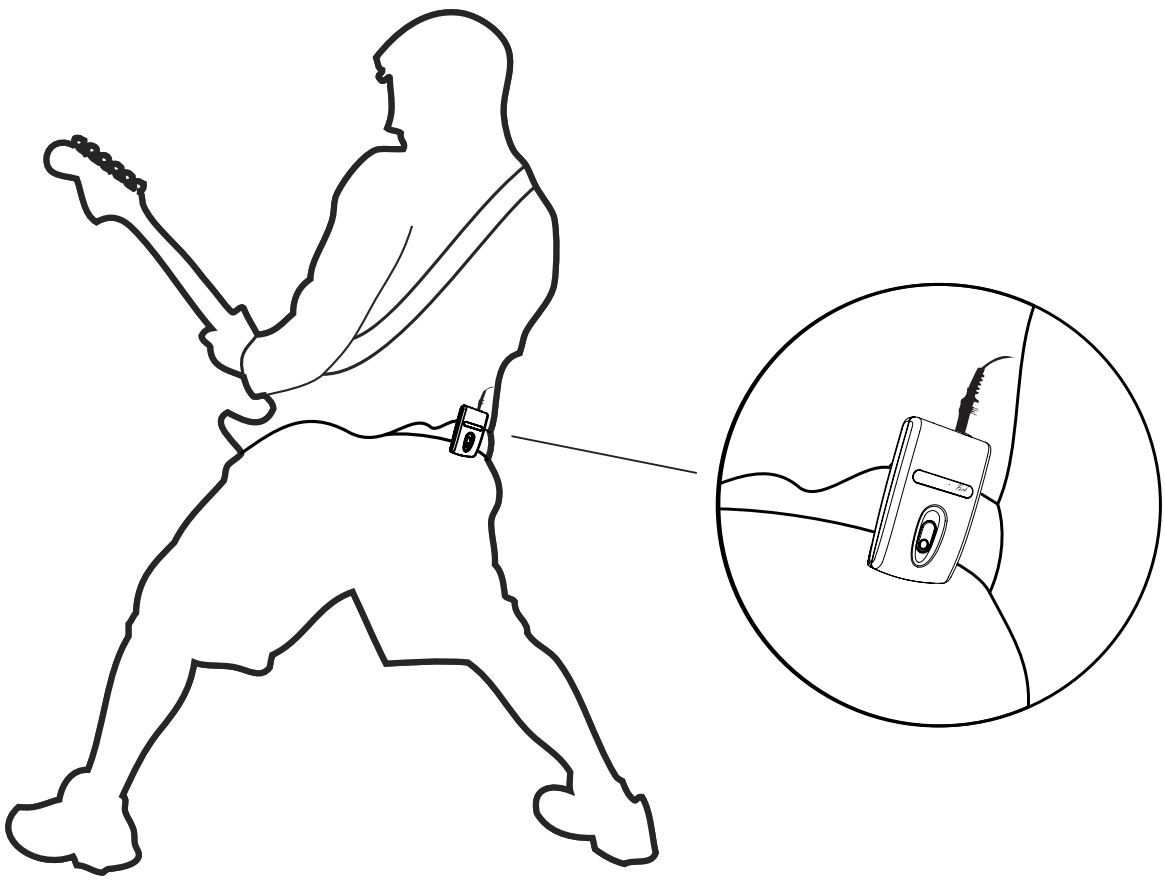

6. Channels

You need to change channels if you are going to use more than one stageClix unit simultaneously in the same venue. Or to solve compatability / interference issues with other equipment, follow this procedure:

1. When the transmitter is inserted into the receiver and charging, press the on/off button on the receiver once.
2. The LEDs on the receiver will start blinking according to the table on the next page.
3. Each keypress on the button will advance one step in the table.
4. If the button is not pressed for 3 seconds, that particular channel setting is stored and the unit will resume its normal charge mode. It can then be used immediately on the new frequency.

Channels table

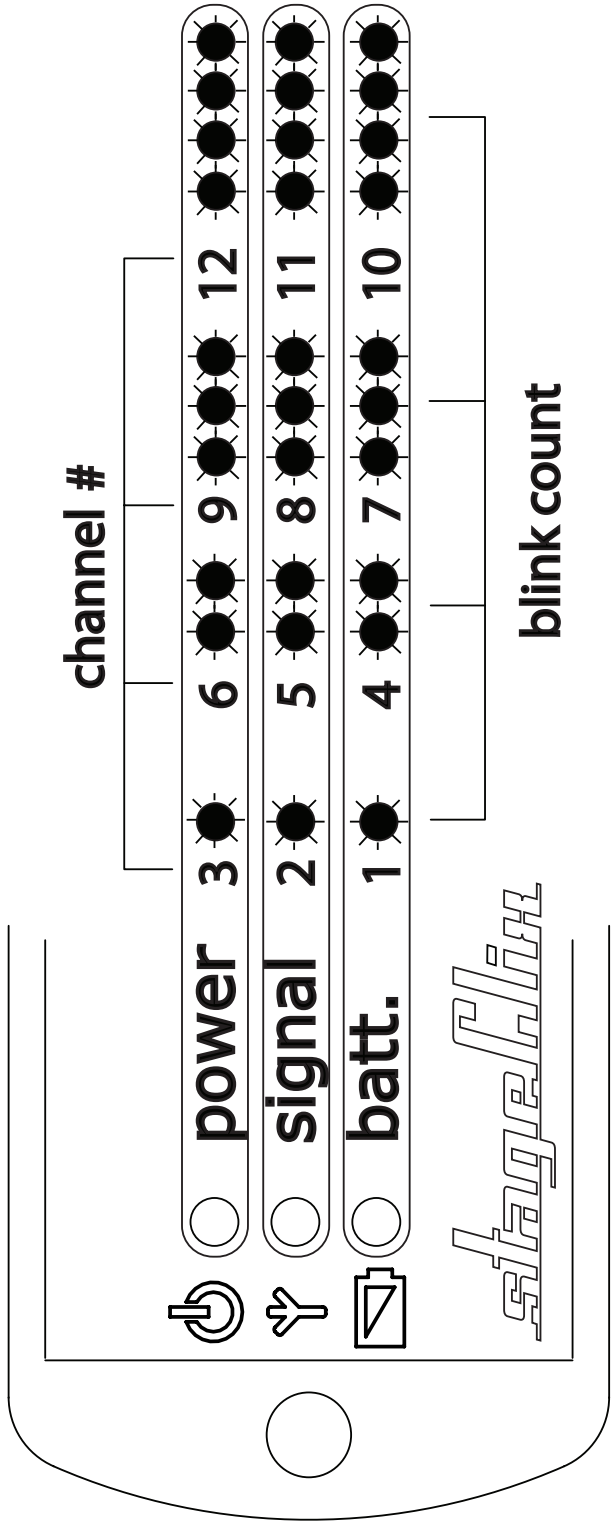

7. Batteries

- This system uses high quality (industrial) NiMH cells
- These batteries do not contain heavy metals like mercury or lead.
- Battery life is expected to be about 5 years. Should the batteries deterioriate, please return them and we will replace them for a reasonable fee and dispose of the returned batteries responsibly. Check out www.stageclix.com for additional information.

To recharge the transmitter, plug it into the 'charge' input on the front of the receiver. After synchronising channels with the receiver (rapidly flashing LED) the unit will go into fast charge mode (fast blinking). This 'fast charge phase' may take up to three hours, and will end automatically.

Very low temperatures can cause the batteries to discharge completely. If the transmitter is exposed to low temperatures for some time, it may be necessary to repeat the charging process.

If the batteries are completely drained (the transmitter doesn't respond to the on/off switch) it could take up to one minute before the unit starts recharging again, after the transmitter is put into the 'charge' input.

Channel synchronisation starts automatically at the beginning of every charging cycle. A completely drained battery could occasionally cause this channel synchronisation to fail, in which case the synchronisation procedure must be started again to link the transmitter with its receiver, i.e. press the on/off button on the transmitter once.

8. Receiver

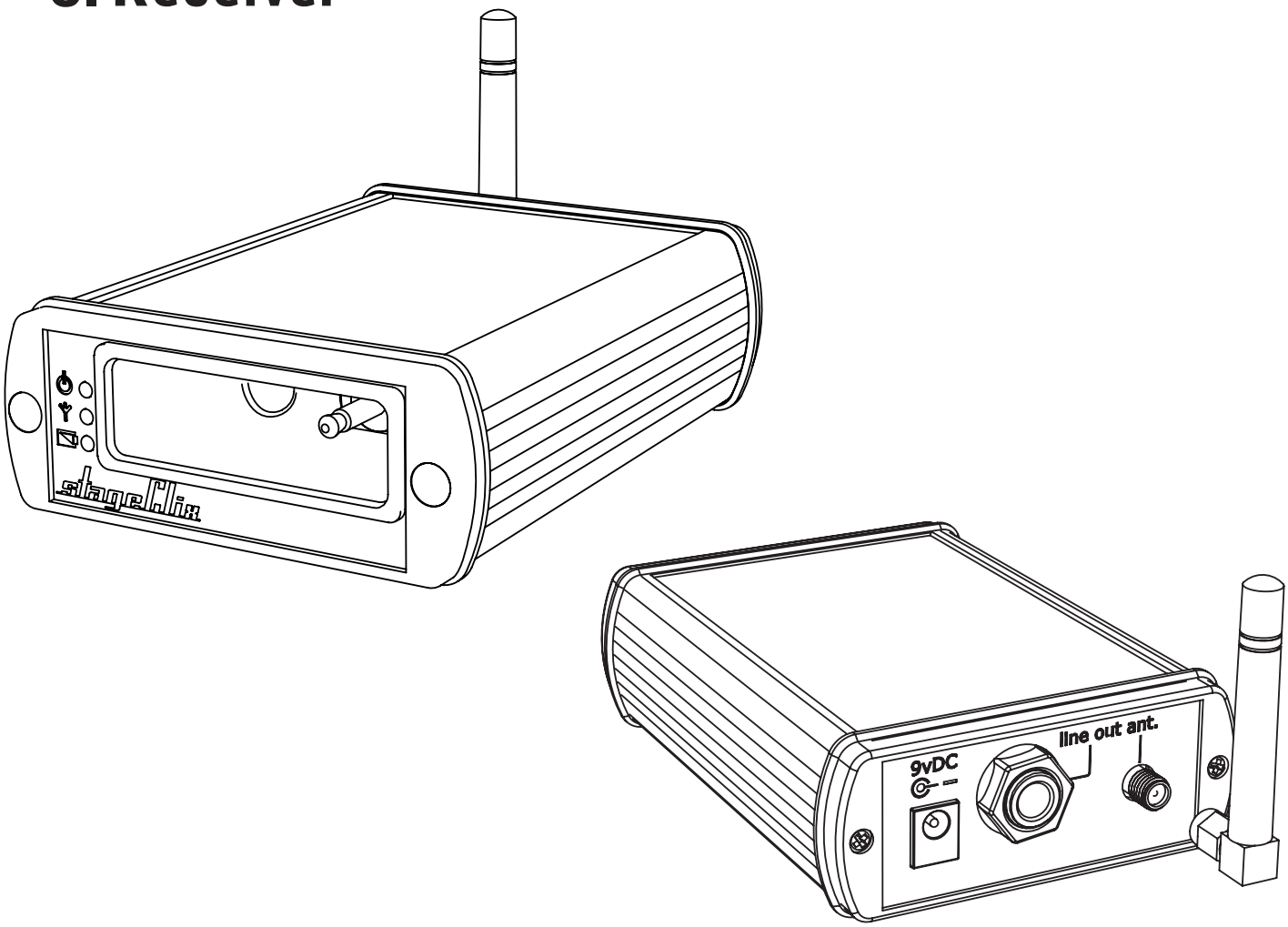

- Supply 9V 250mA
- Full aluminium housing
- Receiving frequency 2400-2483.5MHz
- Receiver sensitivity -82dBm
- Bitstream audio DAC

9. Transmitter

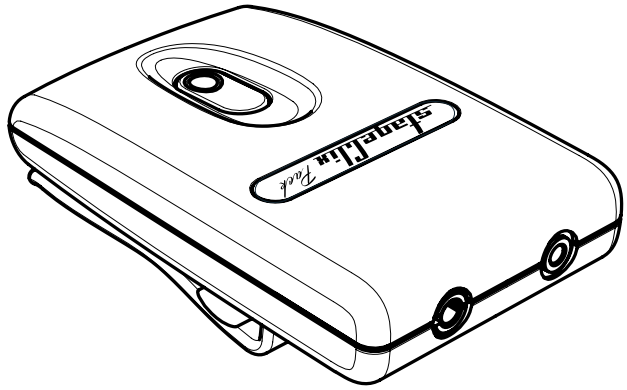

- Dual inputs (line & microphone)
- Battery 2 x 950mAh NiMH cell
- Polycarbonate housing
- Transmitter frequency 2400-2483.5MHz
- RF output power 20mW
- Discrete Jfet preamp
- Input impedance 1.5MegOhm
- Input capacitance <100pF
- ESD protected
- No compander
- Bitstream audio ADC
- 10Hz-20KHz ±3dB @100mVpp

10. Accessories

Spare battery pack
replacement of the transmitter battery

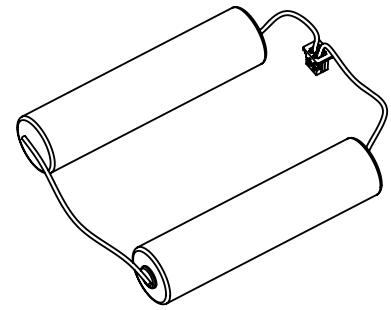

Extra transmitter

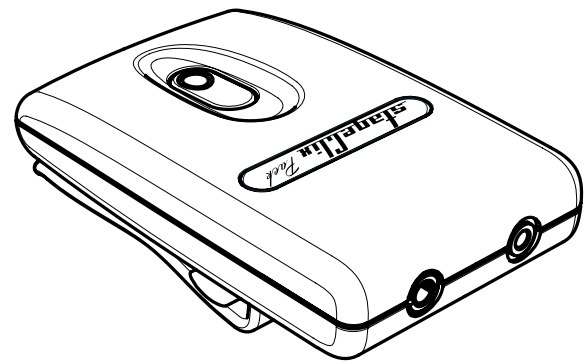

Clip-on Mics

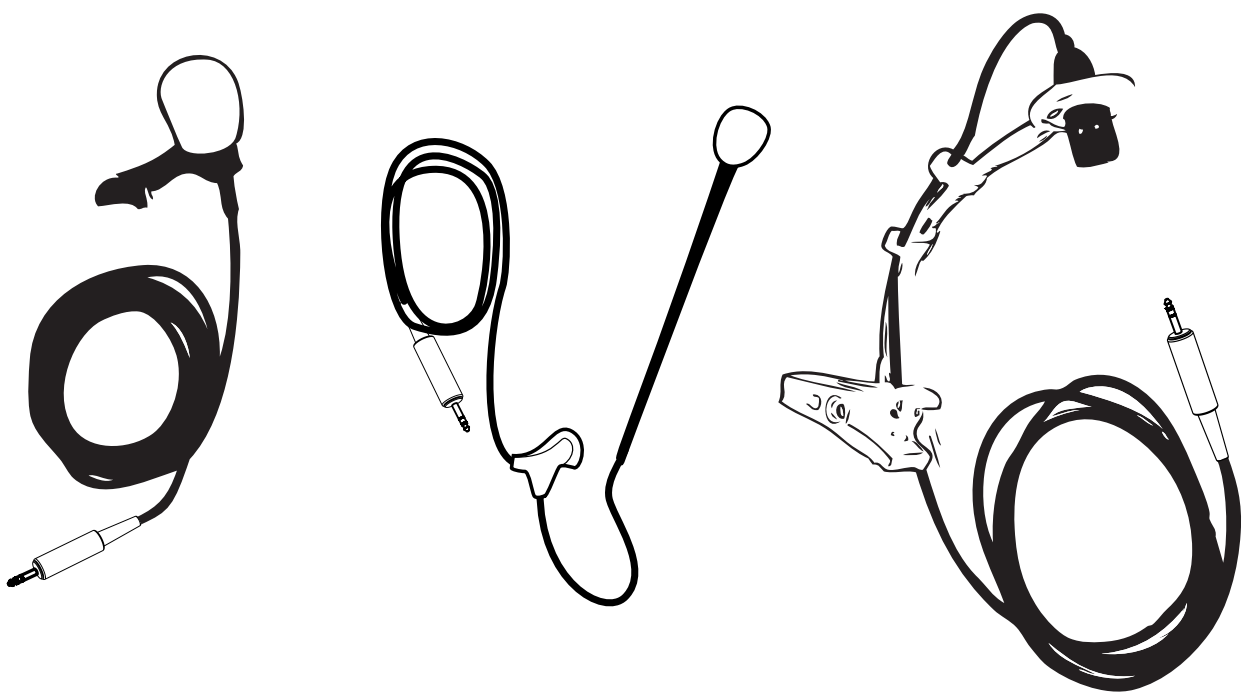

11. Line up : stageClix products

stageClix Jack
Jack plug transmitter with receiver for guitar and bass

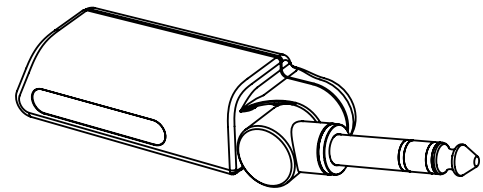

stageClix Vox
Belt pack receiver for in-ear powered monitor use.

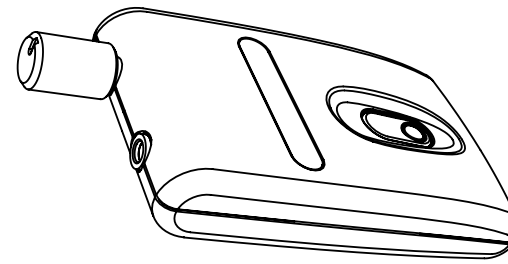

stageClix XLR
Transmitter for dynamic XLR microphones.

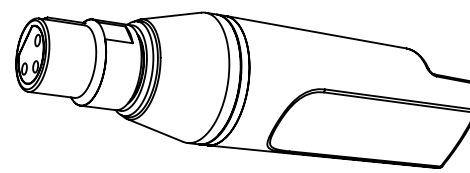

stageClix Rack
To combine several different stageClix systems in one powered 19 inch rack.

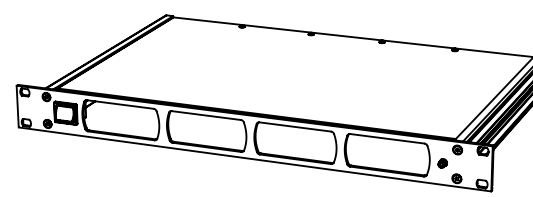

12. Conformities

CE declaration of conformity

This unit is tested to comply with R&TTE:

- ETSI EN 300 328 V1.7.1 (Radio)
- EN 301 489 V1.4.1 (EMC)
- EN 60950 (Safety)

Manufacturer declarations

This unit is RoHS (Restriction Of Hazardous Substances) compliant.

Warranty

The original stageClix product you have purchased is covered by a warranty of 24 months. The warranty period begins on the date of purchase. Please retain your sales receipt as proof of purchase.

We shall satisfy our warranty obligations by remedying any material or manufacturing faults free of charge at our discretion either by repair or by exchanging individual parts or the entire appliance.

Situations which are not covered by this warranty are:

- minor faults or deviations in the quality of the product which do not affect the product's value or fitness for its intended purpose.
- faults resulting from improper use, e.g. operating errors, mechanical damage, incorrect operating voltage. Proper use for the purpose of this warranty is defined as use of the product in compliance with the conditions stated in these instructions for use.
- faults due to normal wear and tear.

Purchaser bears the cost and risk of return shipment to his/her point of sale. Warranty claims can be enforced in any country in which the statutory rights of the country concerned are not in conflict with our warranty regulations. No other warranty claims or claims over and above the right stated in these terms and conditions will be accepted.

www.stageclix.com
The Netherlands